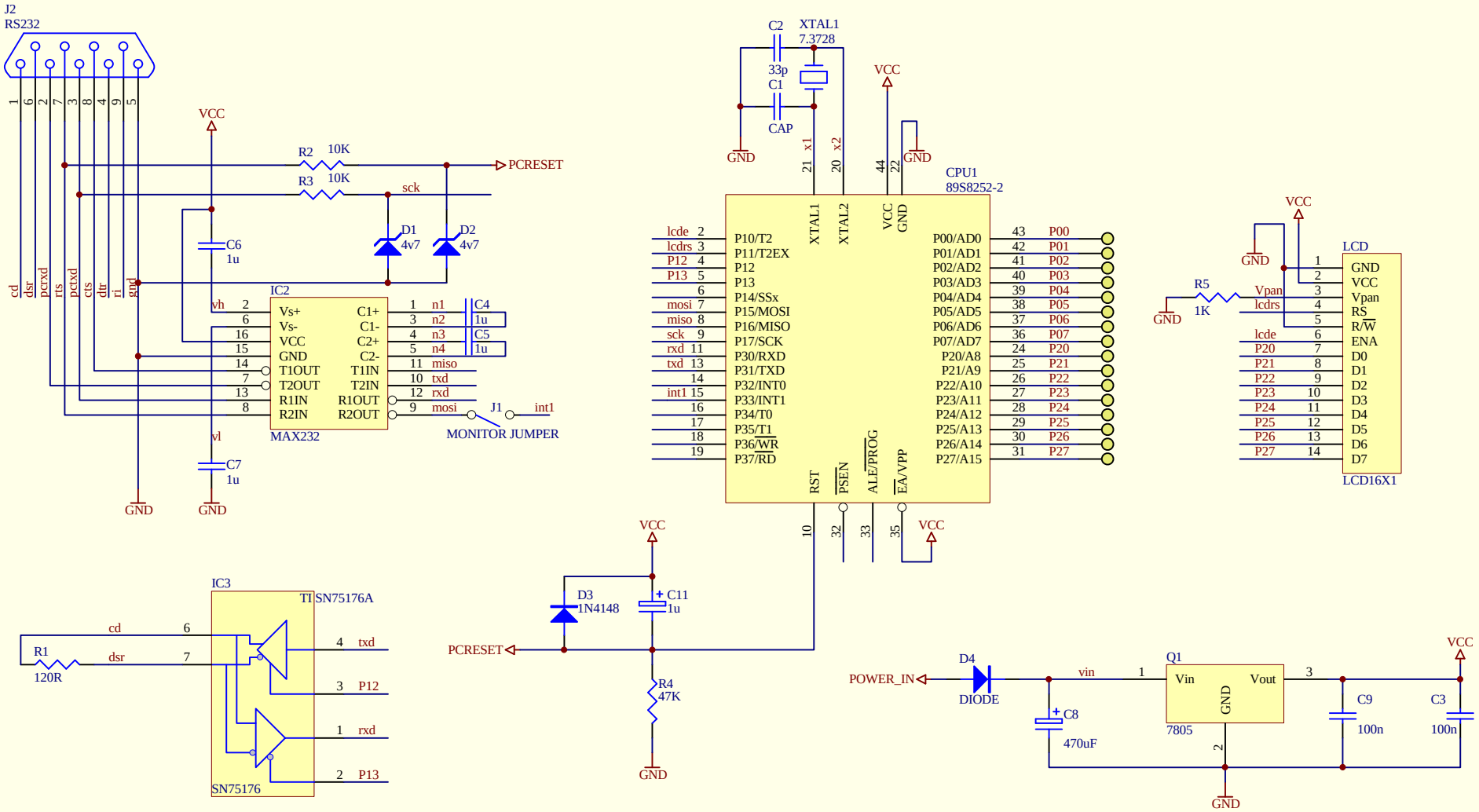

Title		
Size A4	Number	Revision
Date: 1-Apr-2004		Sheet of
File: C:\CLIENT\PROTO51\PROTO-27.SCH		Drawn By: